REVISION	DATE	COMMENT
A	30.03.2022	This is the initial revision.

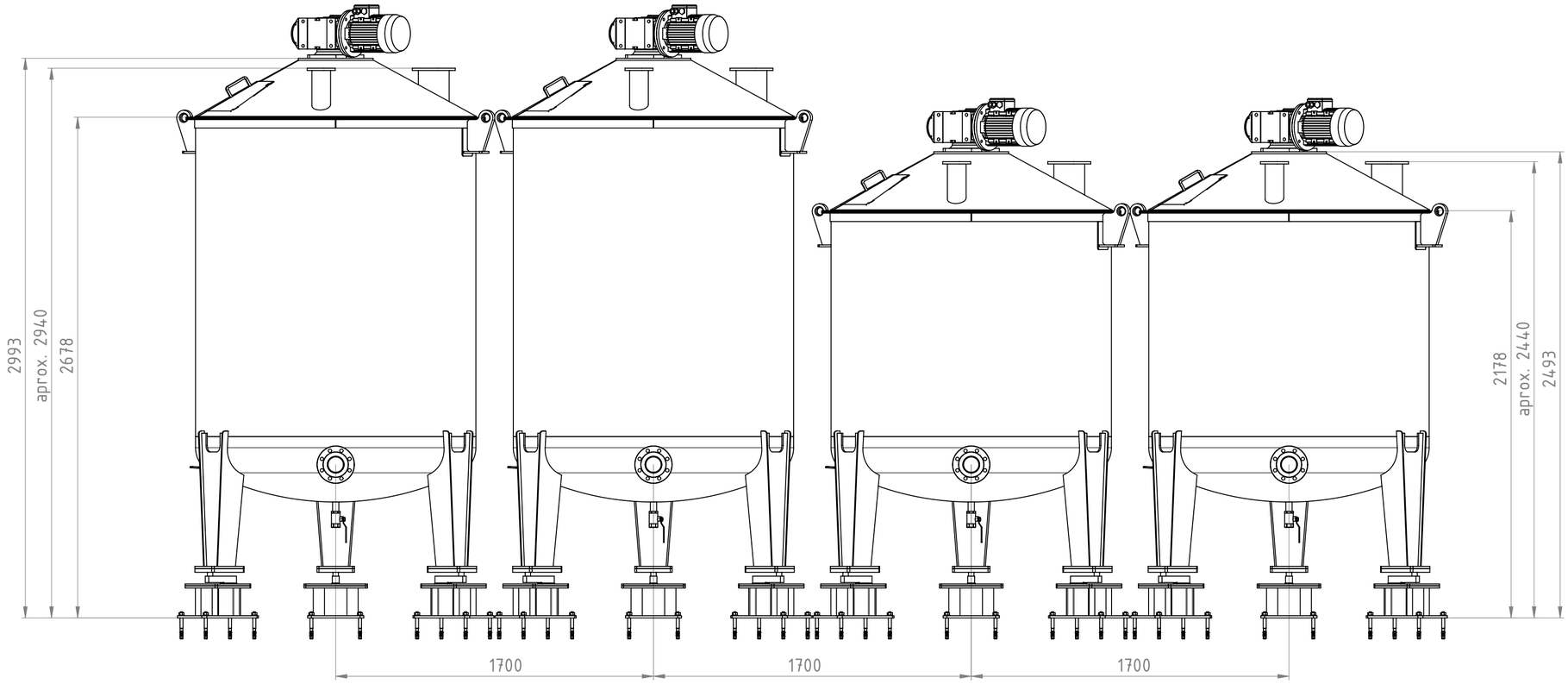

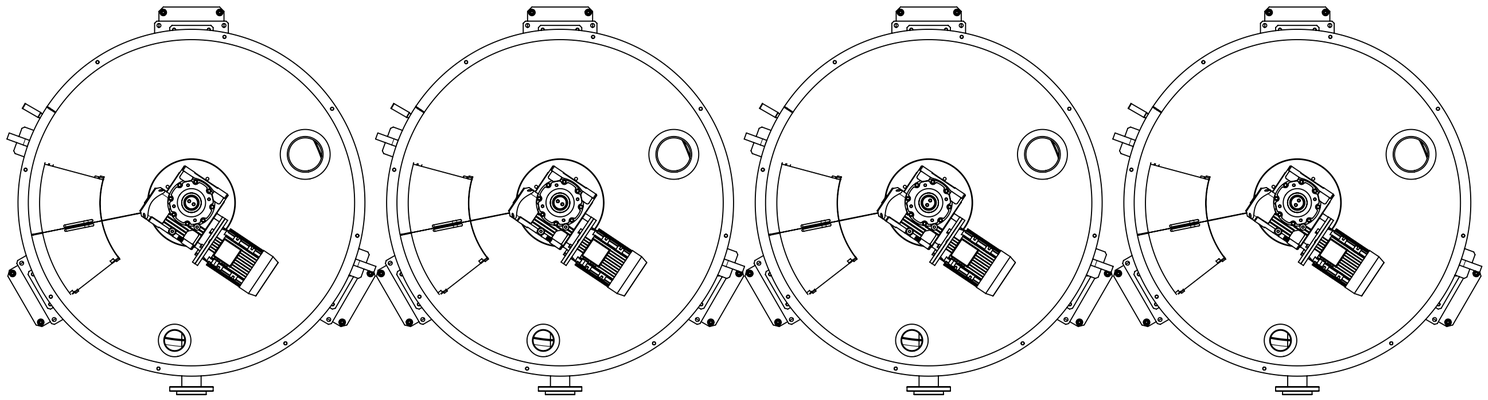

TOPFIBRA
EFFECTIVE FILAMENT WINDING® PIONEERS

TOPFIBRA d.o.o.
Ulica 25. maja 27, 6258 Prestranek Slovenia, EU
www.topfibra.eu Phone +386 8 200 1500

MATERIAL: Assembly

CLA HEIGHT:

Title - Dimensions - Standard

Daily Tanks Flange Positions - Hobas

WEIGHT: 3769.84 kg

COATING:

	SIGN	DATE
DRAWN	Grega Jerin	30. 03. 2022
CHECKED	Fabio Fracasso	30. 03. 2022
APPROVED	Mauricio Facchinetti	30. 03. 2022

Undimen. chamfers ISO 13715 -0,5 +0,3

General Tolerances UNI EN22768/1-m

Form. & Pos. Gen. Tol. UNI EN22768/2-K

Doc. Type	Document No.	Revision
DRW	T01862-01	A

Scale	Sheet	Of	Size
1:20	1	1	A2

THIS DOCUMENT WHICH IS THE PROPERTY OF TOPFIBRA d.o.o. IS SUBJECT OF INTELLECTUAL PROPERTY RIGHTS INCLUDING COPYRIGHT AND DESIGN RIGHT AND SHALL NOT BE REPRODUCED, COPIED, LOANED OR SUBMITTED TO ANY OTHER PARTIES WITHOUT WRITTEN CONSENT.